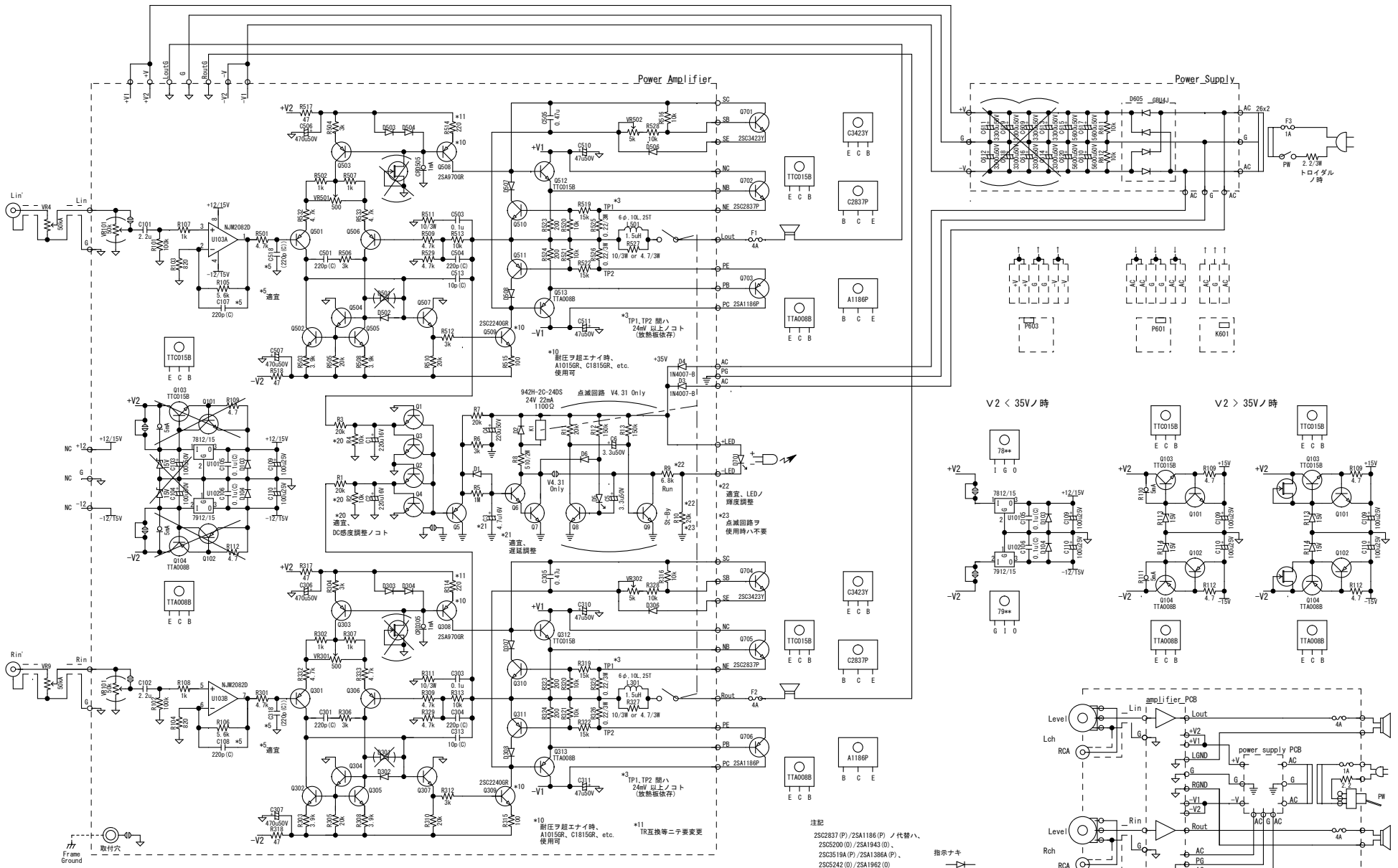

TITLE	DRAWING_No.	
	Power Amplifier V4.31-2 LM12(4558)type	
SHEET	DATE	DESIGN
/	2025/9/6	